Warranty

CruzPro products are carefully tested and adjusted at the factory before shipping and are warranted for one full year against original defects in materials or workmanship. This warranty does not include damage to the product resulting from accident, misuse or neglect.

If the product should become defective within the warranty period, we will repair or replace it free of charge, including free return transportation, provided it is delivered prepaid to the dealer from whom it is originally purchased.

This warranty gives you specific legal rights, and you may also have other rights which vary from state to state, or country to country.

Owner's Handbook

Programming Alternator Size

0-46 Amps

47-61 Amps

62-81 Amps

82-108 Amps

109-144 Amps

145-192 Amps

193-257 Amps

258-344 Amps

Programming Battery Size

0-99 A-H

100-144 A-H

145-210 A-H

211-306 A-H

307-446 A-H

447-651 A-H

652-950 A-H

951-1387 A-H

Table of Contents

Summary and Warnings 2

Introduction 4

Specifications 7

Installation 8

Programming the Jumpers 13

Warranty 16

SUMMARY & WARNINGS

Indicator LED:

- *1 blink per 2 seconds* - Bulk delivery stage
- *2 blinks per 2 seconds* - Absorption stage
- *3 blinks per 2 seconds* - Float stage
- *Continuous blinking* - Equalization stage
- *No blinking* - Loss of input voltage or loss of battery voltage sense line (automatic shut-down within 30 seconds typical, one minute maximum).

To energize an Equalization cycle: When the SAR20 indicator LED blinks 3 times per 2 seconds (float mode) you can start an equalization cycle (see page 4) by holding down the front panel button for 15 seconds. ***Be sure to disconnect anything that can't handle equalization level voltages (up to 16.5 VDC or 33 VDC). If you connect or disconnect any loads from the battery while in equalization mode, the equalization current will not be correct - don't do it.***

SARMAN-O ©1999 BV Engineering
http://www.cruzpro.com
e-mail: info@cruzpro.com

Other CruzPro Products

- Depthsounder & Depthsounder /w Water Temperature
- Speed/Log/w Water Temperature Display
- DC Volts/Amps/Amp-Hour Monitors
- AC Volts/Amps/Frequency/kW Monitor
- LPG/Petrol Gas Detectors/Alarms
- Bilge Water Detector/Alarms & Pump Controllers
- Windlass Controller/Chain Counter
- Digital Fuel Gauge/Consumption Calculator
- Smart and Manual Alternator Regulators
- Marine Security System
- RPM/Engine Hours/Elapsed Time Gauge
- Digital Oil Pressure Gauge/Alarm
- Digital Water Temperature Gauge/Alarm
- Digital Amps Gauge
- 3 Bank Digital Volts Gauge/Alarm
- Digital Clock/Watch/Race Timers/Alarms
- 8 and 16 Amp Light Dimmers
- Battery Voltage Monitors/Alarms
- Solar Panel Charge Controllers
- 4 & 8 Channel NMEA Combiners/RS-232 Convertors
- Engine/Exhaust Temperature Monitor/Alarm
- NMEA 0183 Remote Data Repeater/w 4 Input Channels

Full details at **http://www.cruzpro.com**
Email to: **info@cruzpro.com**

Introduction

The SAR-20 Smart Alternator Regulator commands maximum safe output from your 12 or 24 VDC alternator while monitoring battery voltage and temperature. The bulk of the battery charge is delivered at maximum alternator output allowing battery voltage to rise until the "absorption voltage" has been reached. The SAR-20 then lowers the alternator output to maintain a constant battery voltage at the absorption point. The absorption voltage is maintained for a period of time dependent upon several factors and then the SAR-20 cuts back the battery voltage to a safe "float" voltage.

The SAR-20 will also enable you to desulfate your battery plates by enabling an "equalization cycle" (In float mode, press front panel switch for 15 seconds). During equalization the SAR-20 slowly raises battery voltage to an equalization level while limiting the charge current to about 4-6% of your battery's amp-hour capacity. This safely dissolves the sulfates that form on the battery plates during discharge and extends battery life. The SAR-20 will stay in the equalization stage until the

Programming the Jumpers

Your Smart Alternator Regulator (SAR) is provided with nine black programming jumpers. These jumpers are placed on the programming pins (shown below, Figure 2, and Page 14) as needed. The jumpers tell the SAR battery voltage, alternator size, battery bank capacity, battery chemistry and if your alternator is "hot" rated.

If your battery is a wet cell type, place a jumper on the "Wet/Gel" location. If your alternator can deliver maximum output continuously without burning up, place a jumper on the "Hot Rated/No" location. Remove the jumper on the 12/24V line if you are using the SAR-20 with a 24V alternator or keep the jumper in place if using 12V.

Place jumpers as shown on page 14 to program the size of your alternator and the size of your battery bank.

Now check your wiring carefully. After you are sure there are no errors in the wiring, program the jumpers as described on page 13 and 14.

Turn on the ignition switch to apply power to the SAR-20 At this point the front panel LED should flash one time every two seconds. If not, re-check your wiring. If all is working properly, install the front cover.

Note: After allowing the engine to warm up for 60 seconds, the SAR slowly ramps up the current over the next 20-30 seconds so as to minimize belt slippage.

equalization voltage has been reached, 4 hours, or manually by pressing the front panel button for four seconds, whichever occurs first.

The correct absorption, float and equalization voltages are dependent upon temperature and battery chemistry. The higher the temperature the lower values of absorption, float and equalization voltages that must be used to optimize battery life. For this reason a remote sensor is used to monitor battery temperature and adjust the voltages accordingly. The SAR-20 also has some programming jumpers inside to tell it what type of battery you are using and further adjust the charging voltages accordingly.

During the bulk delivery phase the SAR-20 will command the alternator to deliver maximum output continuously until the absorption voltage is reached. While many modern alternators can do so, some alternators are not "hot rated" to deliver full output continuously and can be damaged by excessive heat. For this reason the SAR-20 can be told whether your alternator is hot rated or not and will automatically cut back the output of a non hot-

Figure 2 - SAR-20 Connections and Jumper Locations

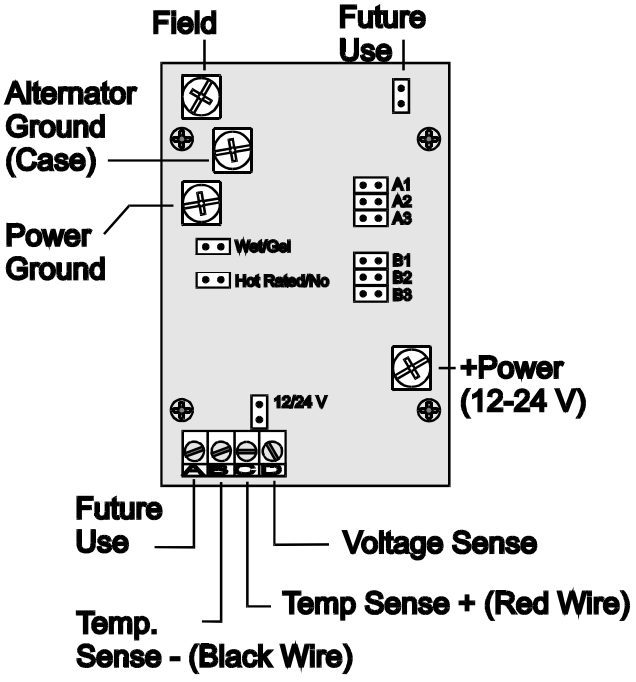

Important - Connect Black temp. sense wire to Terminal B

Specifications

Input Voltage: 9.5 to 35 VDC (external battery voltage sensing).

Operating temperature: 0 to 50 deg Celsius (32 to 122 deg Fahrenheit).

Size: 100 x 60 x 30 mm (4 x 2.4 x 1.2 inch).

Drive Current: 8 Amps maximum (Automatic cut-back for non-hot rated alternators). Ramps current up from 0% to 100% in 30 seconds to prevent belt slip after waiting 60 seconds for engine to warm up.

Steps: Bulk, Absorption, Float and Equalization. Temperature compensated with included probe.

Indicator LED:
- *1 blink per 2 seconds* - Bulk delivery stage
- *2 blinks per 2 seconds* - Absorption stage
- *3 blinks per 2 seconds* - Float stage
- *Continuous blinking* - Equalization stage
- *No blinking* - Loss of input voltage or loss of battery voltage sense line (automatic shut-down within 30 seconds typical, one minute maximum).

rated alternator to 80% of maximum after 15 minutes.

With the heavy loads being demanded by the electrical and electronic conveniences found on many boats it's becoming more common for a second alternator to be fitted to the engine. Most alternators require about 3-4 amps excitation to their field winding in order to deliver maximum output so the SAR-20 is designed to deliver 8 amps, driving up to two alternators.

Another handy feature of the SAR-20 is a trouble-shooting LED that tells you what it's doing. The LED blinks in these various combinations:

- *1 blink per 2 seconds* - Bulk delivery stage
- *2 blinks per 2 seconds* - Absorption stage
- *3 blinks per 2 seconds* - Float stage
- *Continuous blinking* - Equalization stage
- *No blinking* - Loss of input voltage or loss of battery voltage sense line (checked once every 60 seconds).

b) Connect the power ground terminal to the battery negative distribution post.

c) Connect the positive sense line (D) directly to the battery positive terminal through a 5 amp fuse located near the battery.

d) Connect the positive power terminal to the ignition switch through a 5 amp fuse.

e) Connect the alternator ground terminal to the alternator negative post.

f) Connect the Field terminal to the alternator field winding.

Note: Terminal (A) and the single extra jumper near the top right are reserved for future use.

Installation

Before starting the installation, please read this entire section. The instrument is NOT water-proof and must be located in an area that will not get wet. Use 18 gauge (1mm diameter) wire to the screw terminals for the + Battery Sense and - Battery Sense. Use 16 gauge or larger wire for all other connections.

Remove the case front and align the case back onto any suitable surface. Using the case back as a drill guide, mark the location of the holes with a soft pencil lead. Remove the case back and drill 3 mm (1/8 inch) holes where indicated. Mount the case back using stainless steel screws.

Refer to Figures 1 and 2:

a) Connect the temperature sensor wires to terminals (B) and (C) using a small flat screwdriver. The black wire to terminal B. Bolt the sensor to the ***negative*** battery post of the battery to be monitored (charged).

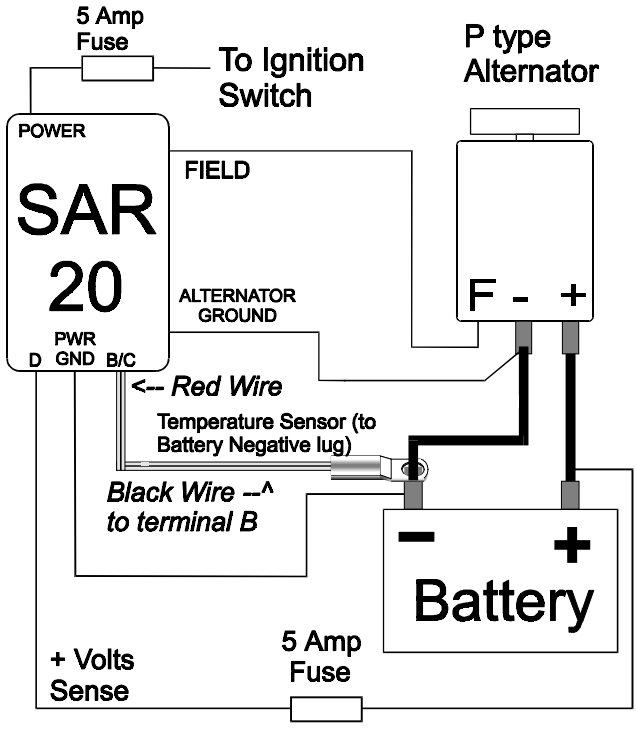

Note: Temperature sensor lug to battery NEGATIVE terminal.

Figure 1 - SAR-20 Wiring